Victor Lite V2 Video Production Camera Cart (VCTR-LTV2-48)

All rights reserved.

No part of this document may be reproduced, stored in a retrieval system, or transmitted by any form or by any means, electronic, mechanical, photo-copying, recording, or otherwise, except as may be expressly permitted by the applicable copyright statutes or in writing by the Publisher.

What’s In The Box

Please inspect the contents of your shipped package to ensure you have received everything listed below:

Top Shelf

Bottom Shelf

2 x Pneumatic Wheels with brake

2 x Pneumatic Wheels without brake

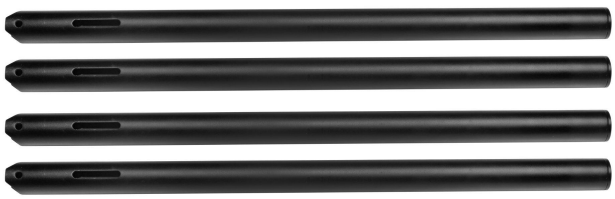

4 x (27.7”) Rods

Accessory Crossbar

Suitcase Handle

2 x Handles

6 x Locking Knobs

6 x Knobs

4 x (16x8x2mm) washers

4 x (6x12mm) Bolts

13mm Spanner

2 x (4mm, 6mm) L- type Allen Key

INDEX

Sr. No.	Particulars	Page No.
1	Assembling Victor Lite Cart	4
2	Pneumatic Wheels(without Brake) Assembly	4
3	Pneumatic Wheels(with Brake) Assembly	4-5
4	Rods Mounting	6-7
5	Top Shelf Mounting	7
6	Accessory Crossbar Mounting	8
7	Suitcase Handle Mounting	9
8	Handle Mounting	9-10
9	Final Setup	10

Victor lite Camera Cart **Setup**

Assembling Victor Lite Cart

- Unlock all four locks on the cart and take out all the collapsed cart parts stored inside.

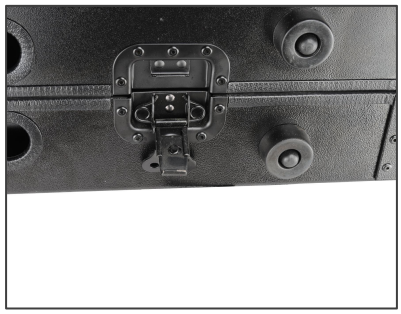

Pneumatic Wheels(Without Brake) Assembly

- Loosen the cart's ratchet knob.
- Slide on the pneumatic wheel (Without brake).

  Feature: The wheels attach easily and are secured using a ratchet lock for quick assembly.

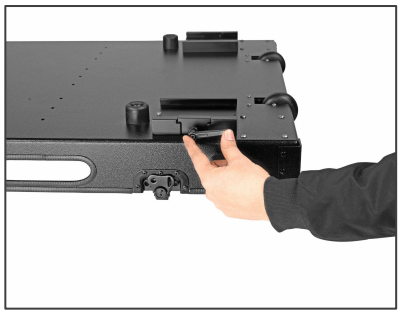

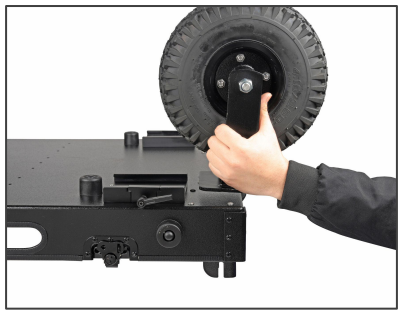

- Tighten the ratchet knob to secure the wheel.
- Ensure the wheel is securely attached.
- Repeat the process for the second pneumatic wheel.

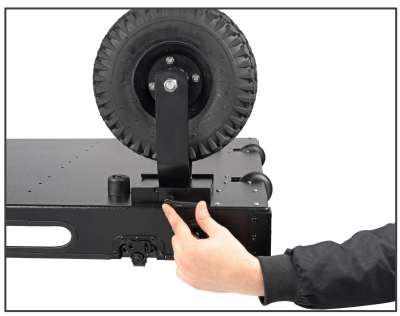

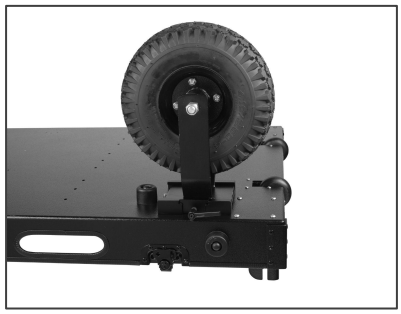

Pneumatic Wheels(With Brake) Assembly

- Loosen the cart's ratchet knob.
- Slide on the pneumatic wheel (with brake).

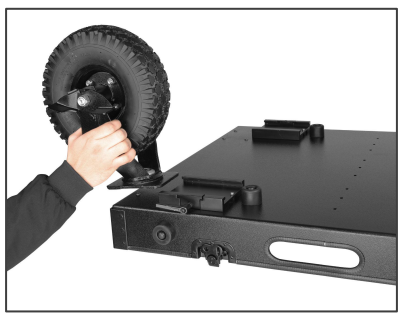

Quick Wheel Assembly & Disassembly

Dovetail Connection with Ratchet Lock

In-Built Stopper &

Internal Locking Mechanism

- Once the wheel is in place, tighten the ratchet knob securely.
- Ensure the wheel is securely attached.
- Repeat the process for the second pneumatic wheel.

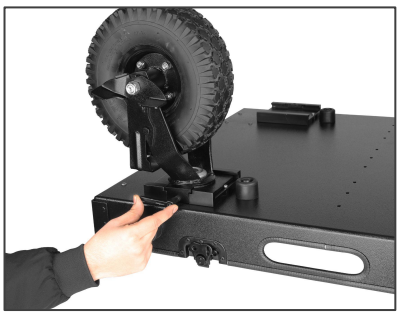

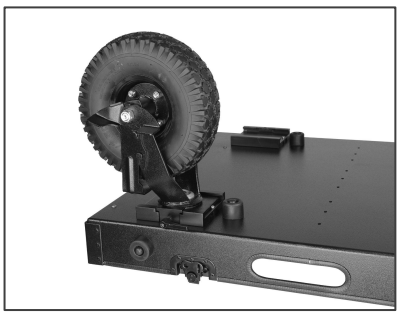

Feature: One pair features 360° swivel pneumatic with a quick-action foot brake for precise control, while the other pair includes fixed pneumatic for smooth, stable operation.

Smooth Mobility & Easy Halts

Reliable Wheels with Custom Foot Brakes

Rods Mounting

- Use a 13mm spanner and a 6mm Allen key to loosen and remove the nut and bolt.

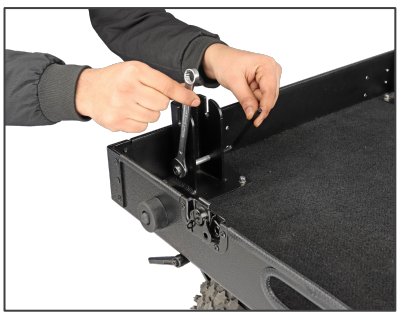

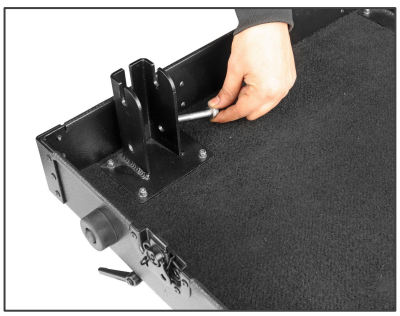

- Insert the rod into the cart, then re-insert the nut and bolt.

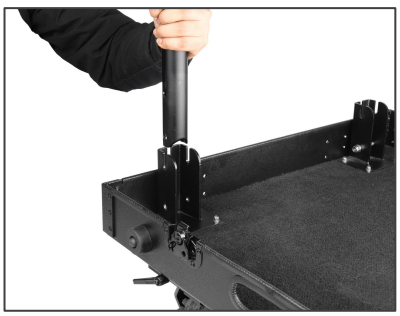

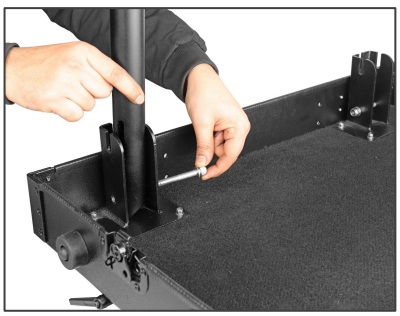

- Tighten the nut and bolt securely using the 13mm spanner and 6mm Allen key.

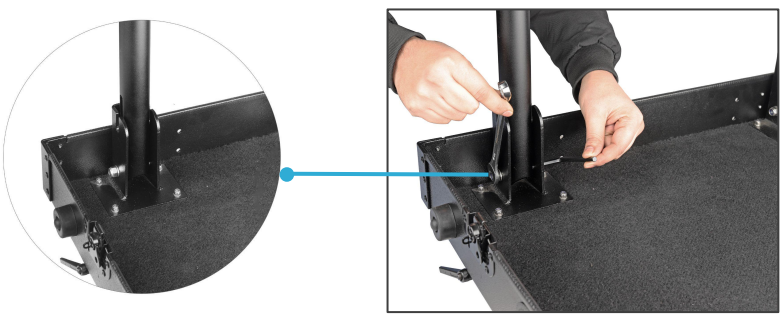

- Align and insert the locking knob to secure it in place.

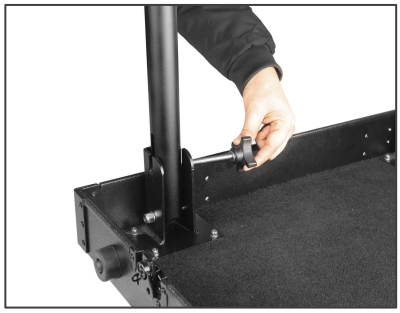

- Repeat the process for remaining rods.

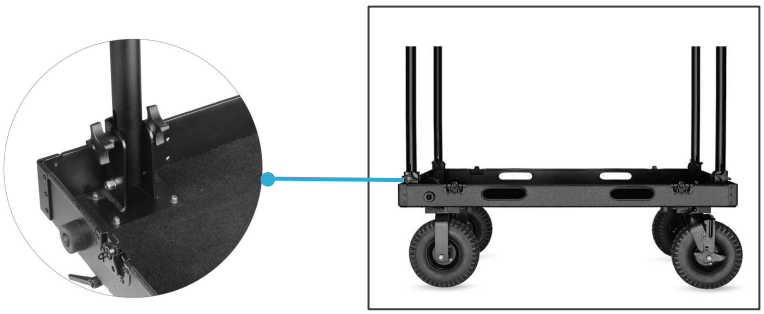

Top Shelf Mounting

NOTE: Two people are required to position the top shelf onto the rods.

- Place the top shelf onto the rods, as shown in the image.
- Insert the knob and tighten it securely.

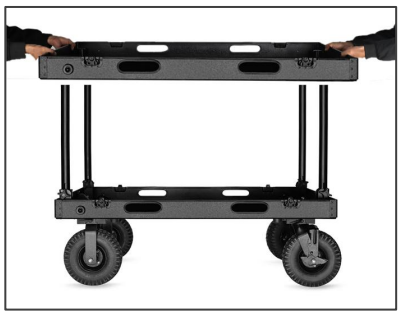

- Repeat the process to attach the remaining knobs to the other corners.

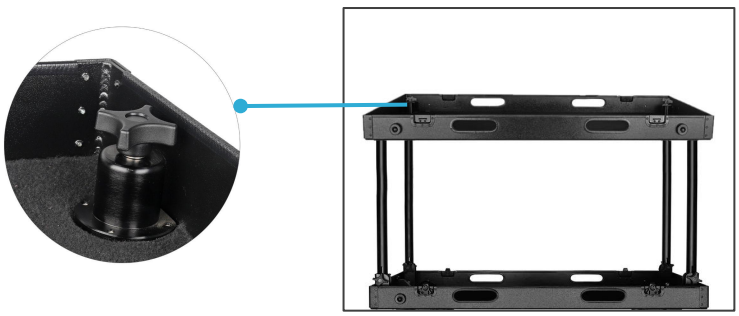

Accessory Crossbar Mounting

- To attach the crossbar, loosen the side clamp knobs on the accessory crossbar and open them.

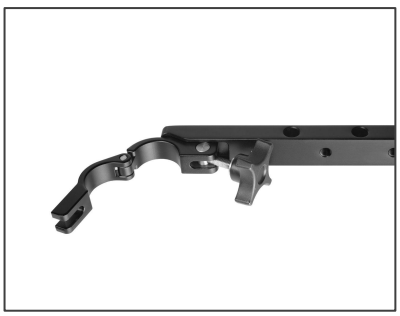

- Mount the crossbar onto the rods and tighten the knobs to secure it.

- The accessory crossbar is now securely attached to the rods.

Suitcase Handle Mounting

- To attach the suitcase handle, remove all button heads using the 4mm Allen key.

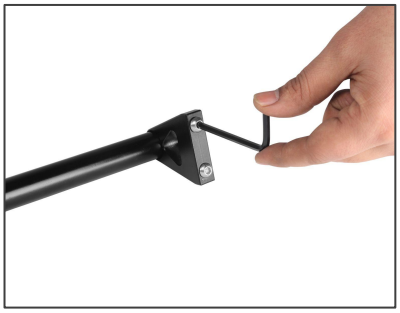

- Align the handle with the top shelf and insert all the button heads.

- Tighten all the button heads securely with the 4mm Allen key.
- The suitcase handle is now firmly attached to the top shelf.

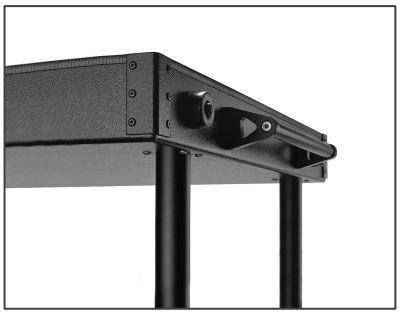

Handles Mounting

- Twist the handle to the left to loosen it and open the speed rail clamp.

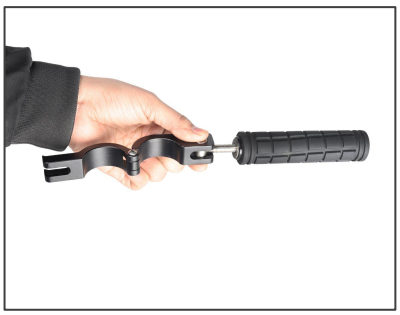

- Attach the handle to the speed rail using the speed rail clamp.
- Then twist the handle to the right to securely tighten it.

- Follow the same process to attach the second handle.

  NOTE: You can adjust the handle position to suit your preference.

- Your cart is now ready for use.

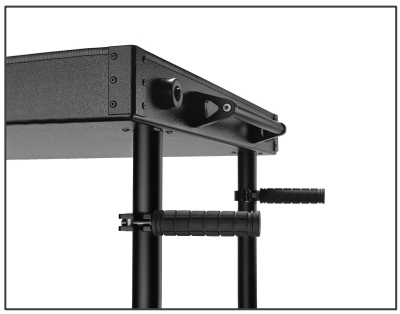

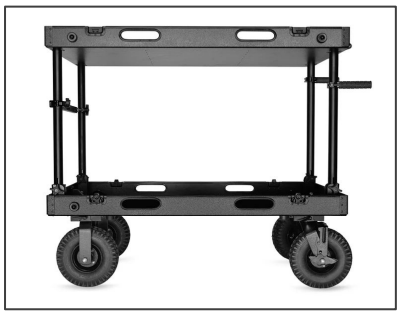

YOUR PROAIM VICTOR LITE V2 VIDEO PRODUCTION CAMERA CART ALL DRESSED UP AND READY TO GO!

(SHOWN WITH OPTIONAL ACCESSORIES)

Warranty: We offer one year warranty for our products from date of purchase. Within this period of time, we will repair it without charge for labor or parts. Warranty doesn't cover transportation costs nor does it cover a product subjected to misuse or accidental damage. Warranty repairs are subjected to inspection and evaluation by us.

Liability: We are not liable for damage caused by products that we do not supply or from mishandling in transit, accident, misuse, neglect, lack of care of the product, or service by anyone other than our company.

Contact Us: In case of any kind of dissatisfaction, please Contact us immediately and we promise our utmost support and care until you use our product.